INSTALLATION INSTRUCTIONS ANALOG V-TIMER

(It is obligatory the V-timer device to be installed by a licensed electrician)

Current Situation

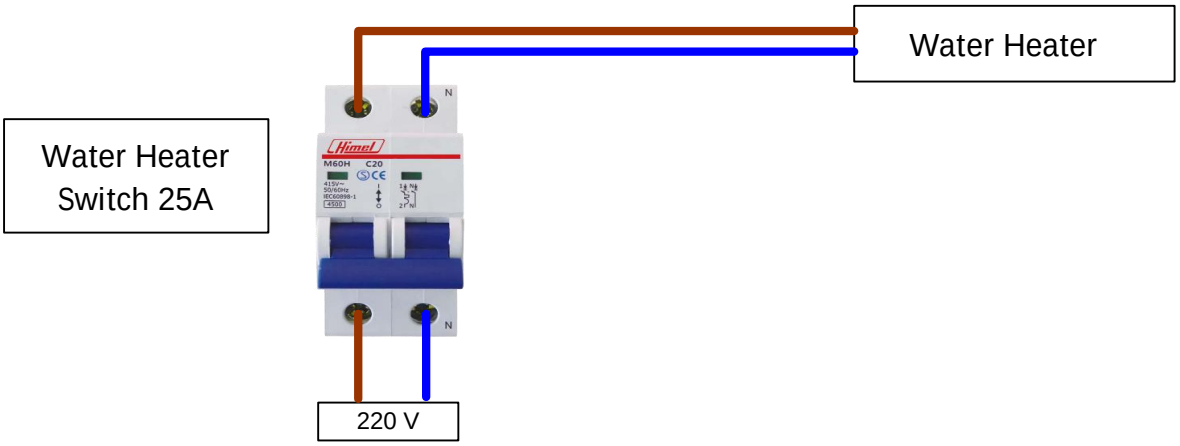

V-TIMER WIRING

Caution:
During the installation you should tighten the cables of the water heater very well in the strong relay in order the avoid scintillations.

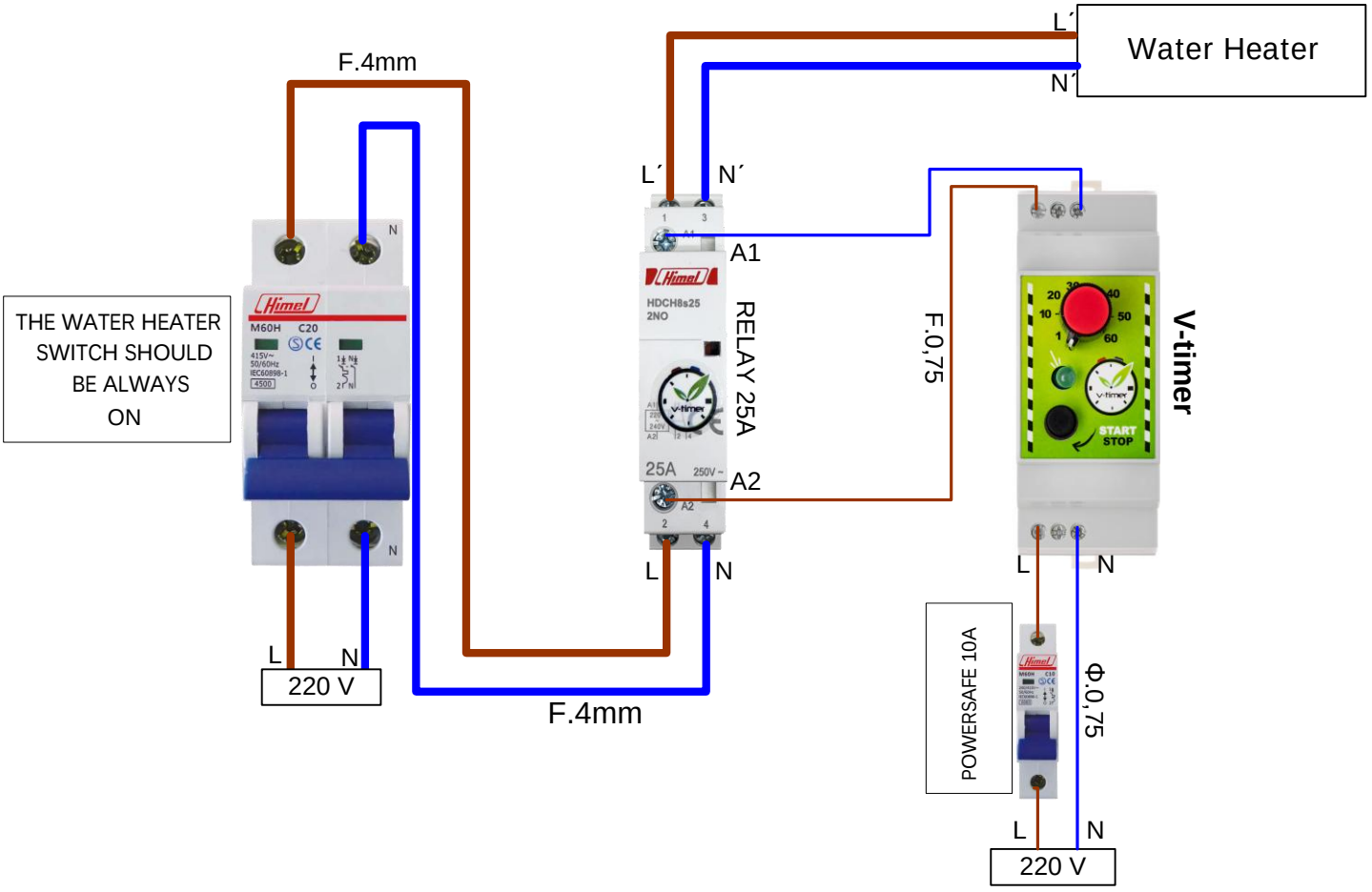

Caution: In the wiring of the phase and neutral with the strong relay during input and output, the cables must have the same direction.
The water heater switch should be always ON

web: http://www.vtimer.eu / email: info@vtimer.eu / τηλ. +30 2616 00 26 26

International Patent License : 20150100506

CE